April 2010

Air Conditioning & Heat Pump Institute

VRV/VRF Variable refrigerant volume (or flow) technology

Introduction to VRV / VRF

Variable Refrigerant Volume or Variable Refrigerant Flow (depending on manufacturer) has been around for about a quarter of a century. The basic idea is that a large outdoor unit serves multiple indoor units. Each indoor unit uses an LEV (electronic liquid expansion valve) to control its refrigerant supply to match the demand of the space it serves. The outdoor unit also varies its output to match the communal demands of the indoor units it serves. Thus, at any point in a system there will be a variable volume of refrigerant flowing. Various strategies are used to vary the output of the outdoor units including;

- Modulating fan/s
- Heat exchanger valved in sections
- Variable speed inverter drive compressor/s
- Multiple compressors
- Twin or multiple modular outdoor units

Outdoor unit capacities range from around 14 kW to over 100 kW. Indoor units cover the full range of DX models normally available.

System types

VRV/VRF systems can be used for cooling only, heat pumping and heat recovery. On heat pump models indoor units can be in either mode but all must be in the same mode if served by the same out door unit. The cooling only and heat pump models are basically large, sophisticated, efficient multi-splits. The heat recovery or simultaneous mode systems provide both heating and cooling from the same outdoor unit and thus exploit this technology most effectively. They offer considerable potential for energy savings in many applications.

Energy saving

The most sophisticated VRV/VRF systems can have indoor units, served by a single outdoor unit, in both heating and cooling modes simultaneously. This mixed mode operation leads to energy savings as both ends of the thermodynamic cycle are delivering useful heat exchange. If a system has a cooling COP (Coefficient of Performance) of 3, and a heating COP of 4, then heat recovery operation could yield a COP as high as 7. It should be noted that this perfect balance of heating and cooling demand is unlikely to occur for many hours each year, but whenever mixed mode is used energy is saved. In mixed mode the energy consumption is dictated by the larger demand, heating or cooling, and the lesser demand, cooling or heating is delivered free. Units are now available to deliver the heat removed from space cooling into hot water for space heating, domestic hot water or leisure applications, so that mixed mode is utilised for more of the year.

Figure 1 - VRV – 2 Pipe Heat Pump Pipe Work Schematic

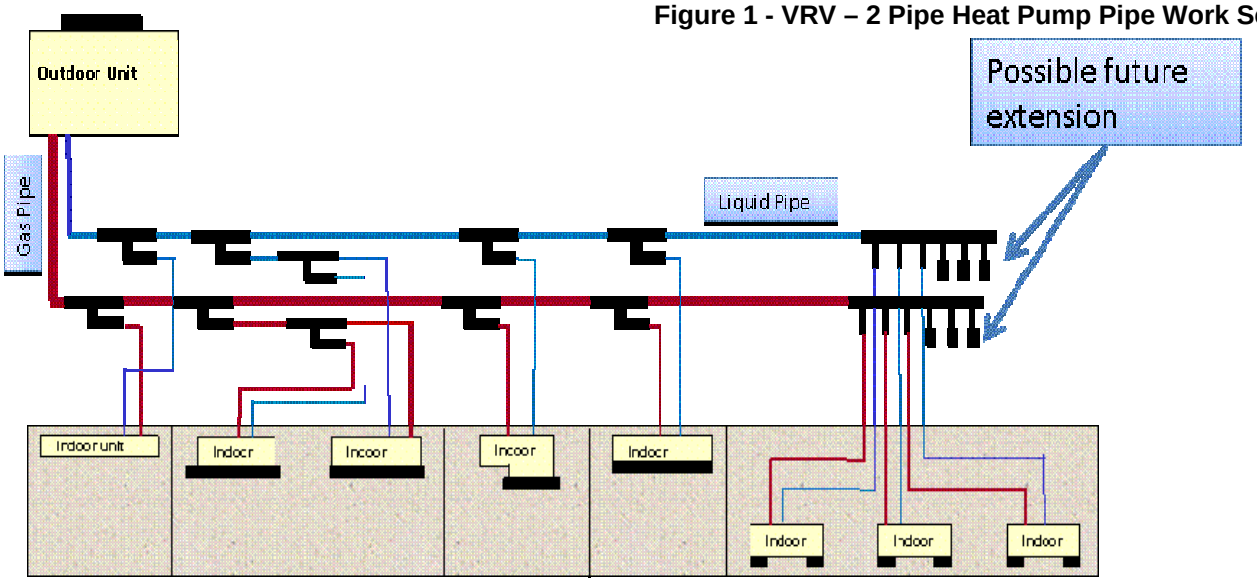

VRV/VRF systems have been successfully used on ground source applications where higher COPs can be realised due to the lack of seasonal change in underground temperature.

Heat recovery operation

Heat recovery operation is achieved using either 3 pipes or 2 pipes (depending on manufacturer). See fig 2.

The 3 pipe heat recovery system has a liquid line, a hot gas line and a suction line from the outdoor unit. Each indoor unit is branched off from the 3 pipes using solenoid valves. An indoor unit requiring cooling will open its liquid line and suction line valves and act as an evaporator. An indoor unit requiring heating will open its hot gas and liquid line valves and will act as a condenser.

The 2 pipe heat recovery system has a central branch controller with 2 pipes from the outdoor unit and 2 pipes to each indoor unit (fig 3). For mixed mode operation the branch controller separates a mixture of saturated liquid and vapour delivered by the outdoor unit so that each indoor can receive high pressure liquid or vapour. In both cases the liquid produced by indoor units in heating mode is then used to serve indoor units in cooling mode and improved energy saving is possible.

Conclusion

VRV/VRF is a proven technology which can play a large part in helping integrated building services design to achieve high energy efficiency. It is based on the simple vapour compression cycle but must be fully understood to exploit its full potential, both at the design stage, and in installation, commissioning and service. Before working with VRV/VRF systems it is strongly recommended that manufacturer's product training be undertaken.

www.ior.org.uk/achpi

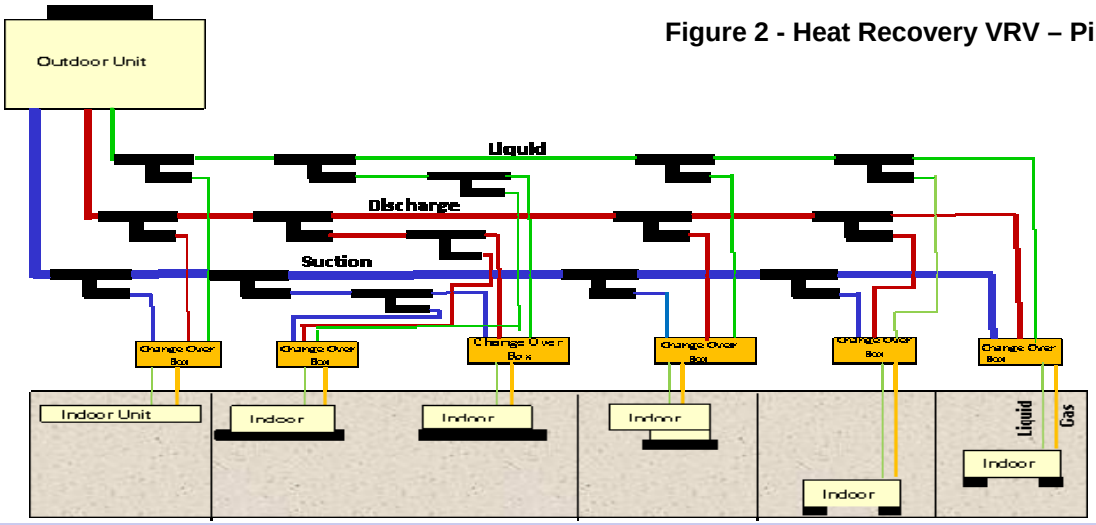

Figure 2 - Heat Recovery VRV – Pipe Work Schematic

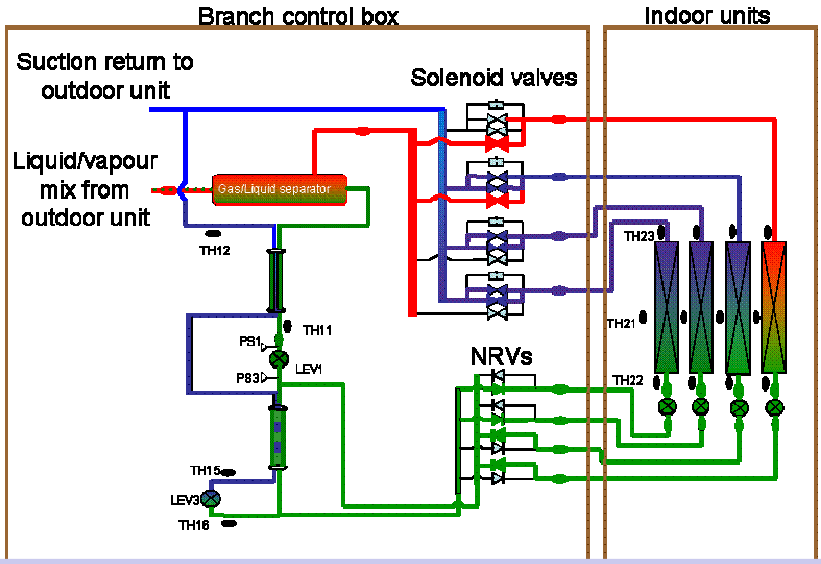

Figure 3 - 2 Pipe system simultaneous heating and cooling

Published by the Air Conditioning and Heat Pump Institute, a section of the Institute of Refrigeration.
The Institute of Refrigeration accepts no liability for errors and omissions.
With thanks to Mitsubishi Electric and Daikin Air conditioning UK for assistance with content